POWER CUT 45

GeKaMac®

Users Manual

Please Read and Understand This Manual
Before Operating The Welding Machine

www.gedikwelding.com

AT UYGUNLUK BEYANI

EU DECLARATION OF CONFORMITY

Bu uygunluk beyanı yalnızca imalatçının sorumluluğu altında düzenlenir.

This declaration of conformity is issued under the sole responsibility of the manufacturer.

İstanbul, Turkey, 08.03.2024

İmalatçı / Manufacturer

GEDİK KAYNAK SANAYİ ve TİCARET A.Ş.

Ankara Cad. No.306 Seyhli Pendik ISTANBUL TURKIYE

Ürün / Product	PLASMA CUTTING MACHINE
Marka-Model / Brand- Model	POWER CUT 45

Yukarıda tanımlanan beyanın nesnesi ilgili uyumlaştırılmış AB mevzuatı ile uyumludur.

The object of the declaration described above, is in conformity with the relevant union harmonisation legislation.

Direktifler / Directives	2014/30/EU & 2014/35/EU & 2009/125/EC EU/2019/1784

Uyumlaştırılmış standartlar ve uygunluğun deklare edilmesiyle ilişkili diğer referanslar.

References to the relevant harmonised standarts used and references to the other technical specifications in relation to which conformity is declared.

Standartlar / Standards	EN IEC 60974-1 EN IEC 60974-10

Bu ekipman, talimatlara uygun kurulduğunda, bakımı yapıldığında ve kullanıldığında belirtilen standartlara uygundur. Makine üzerinde bir değişiklik yapıldığında veya yanlış kullanımda deklarasyon geçersiz olur.

The equipment is in compliance with pertinent legislation when installed, utilized, and maintained in accordance with the enclosed instructions. This declaration will be invalid under any modification or improper use.

İmalatçı Adına İmzalayan / Signed for and on behalf of:

Hatice Özel, Equipment Business Unit Director

EN ENGLISH

Introduction	2
Description	2
Usage limits (IEC 60974-1)	2
Technical data	3
How to lift up the machine	3
Opening the packaging	3
Plasma cutting	3
Installation	3
Connection to the electrical supply (Fig. A)	4
Usage norms	4
Connection of plasma torch and ground wire	5
Connection of compressed air	6
Sequence of operations to perform before cutting	6
Maintenance	7
Possible problems and remedies	7
Troubleshooting table	8
Common cutting defects	9
Meaning of graphic symbols on machine	9
Key to the electrical diagram	9
Colour key	9
Wiring diagram	10

Introduction

Thank you for buying our product.
In order to get the best performance out of the plant and ensure the maximum lifespan of its parts, the use and maintenance instructions contained in this manual must be read and strictly complied with, as well as **the safety instructions contained in the relevant folder**. If repairs to the plant are required, we recommend that our clients contact our service centre workshops, as they have the necessary equipment and personnel that are specifically trained and constantly updated.
All our machines and equipment are constantly developed and so changes may be made in terms of their construction and features.

Description

Powerful, light, and easy to manage, the **POWER CUT 45** is an effective solution for manual cutting of any metal and perforated plating. It is ideal for panel beating work, metalwork, industry and maintenance tasks. It can be connected to a single-phase power supply with a 16 A fuse, also and above all thanks to the PFC **(Power Factor Correction)** device that makes the shape of the wave of the current absorbed sinusoidal, resulting in an absence of harmonic disturbance and optimisation of energy absorption from the mains.

This plant's technical characteristics are:
- Innovative practical design.
- Supporting structure in metal with front panel in special shockproof material.
- Robust handle integrated into the chassis.
- Arc parameter control device for excellent cutting quality.
- Single-phase power supply 230 V - 50/60 Hz (standard version).
- Double single-phase power supply 115/230 V - 50/60 Hz (version on demand).
- Continuously regulated cutting current to improve the appearance of the cut.
- Stability of cutting parameters within ±15% of rated input voltage fluctuations.
- Protection against under voltages and excess voltages on the mains.
- Two position control:
  - CUT - The switch must be moved to this position whenever you want to cut.
  - AIR CHECK - The switch must be moved to this position whenever you want to carry out a test to check that air is present.
- A series of LEDs for indicating the cutting operating cycle and checking correct functioning of the plant.
- Plasma torch with ignition of pilot arc without high frequency.
- Accident prevention protection on the torch and in the equipment complywith the new international safety norms.
- Heat protection against overloads.
- Low air consumption (130÷150 l/min @ 5÷5,5 bar).
- Air filter unit which automatically expels impurities.

Usage limits (IEC 60974-1)

The use of plasma equipment for cutting is typically discontinuous as it consists of periods of effective operation (cutting) and rest periods (while the piece is being positioned, etc.). The size of the equipment is suitable for safe use of max. nominal current I_2 for a working time that is 35% of the total time of use. The regulations in effect stipulate that 10 minutes is the maximum total time of use. For the work cycle, 35% of that time is considered. Any excess of the permitted work cycle triggers a thermal circuit breaker which protects the internal components of the equipment against dangerous overheating. When the thermal circuit breaker is triggered, the yellow LED on the front of the equipment is lit (Pos. 3, Fig. C). After a few minutes the overheat cutoff resets itself automatically and the yellow LED goes off, indicating that the equipment is once again ready for use.

Technical data

The technical data for this equipment is summarized in the table 1.

Table 1

Model		**POWER CUT 45**	
Single-phase power supply 50/60 Hz	V	115 ±15%	230 ±15%
Mains supply: Z_{max}	Ω	(*)	
Power input @ I_2 Max	kVA	4,8	5,5
Delayed fuse (I_2 @ 100%)	A	25	16
Power factor / cosφ		0,97 / 0,99	
Efficiency degree	η	0,80	
Open circuit voltage (peak)	V	460	
Current range	A	20 ÷ 30	20 ÷ 40
Duty cycle @ 100% (40°C)	A	-	20
Duty cycle @ 60% (40°C)	A	20	30
Duty cycle @ 35% (40°C)	A	-	40
Duty cycle @ 25% (40°C)	A	30	-
Cutting capacity			
recommended	mm	8	10
maximum	mm	12	15
severance	mm	15	18
piercing	mm	-	8
Standards		IEC 60974-1 IEC 60974-7 IEC 60974-10 CE S	
Insulation class		IP 23 S	
Protection class		F	
Dimensions	mm	595-390-185	
Weight	kg	15,50	

(*) **IMPORTANT:**
- This plant meets the requirements laid down in the **EN/IEC 61000-3-12** standard on harmonic currents.
- This system, tested according to **EN/IEC 61000-3-3**, meets the requirements of **EN/IEC 61000-3-11**.

How to lift up the machine

This plant has a handle specifically for carrying the machine by hand.

NOTE: *These hoisting and transportation devices conform to European standards. Do not use other hoisting and transportation systems.*

Opening the packaging

The standard composition of this plasma cutting system is made up of:
- **SHARK 45** cutting units.
- Plasma torch with centralised attachment and spare parts kit.
- Earth cable, complete with rapid coupling.
- Neck strap (optional).
- Trolley for transportation (optional).

On receipt of the unit, perform the following operations:
- Remove the plasma cutting unit and all relative accessories and components from the packaging.
- Check that the plasma cutting unit is in good condition. If it is not, inform your dealer immediately.
- Make sure that all the ventilation louvers are open and that the airflow is not obstructed.

Plasma cutting

The cutting system used by this equipment is a low current system that uses compressed air as its plasma equipment as well as for cooling. The air normally used is a mixture of 79% nitrogen and 21% oxygen. These two biatomic gasses have almost identical enthalpy and form a highly energetic blend. The low current also makes it possible to use torches with a low air capacity and moderate cutting speed, that are more suitable for manual procedures.

CUTTING PARAMETERS

In analyzing the parameters that characterize manual plasma cutting it is necessary to note that they depend on the material to be cut, its thickness and the skill of the operator in following the cutting line. Optimum speed depends largely on the skill of the operator and amount of material to be cut and is achieved when the fused material flows through the groove and is not projected in the direction of the torch. If the latter occurs, cutting speed has to be reduced.

The parameters that affect cutting are:
- **Electric power.** Any increase in electric power will permit higher cutting speed and greater thickness of the material to be cut
- **Compressed air capacity.** Increasing the air capacity enables cutting thicker material and ensures better quality at any thickness
- **Distance between hood and piece.** The appearance of the cut and wear of the active components of the torch depends on the hood being held as a correct distance from the piece.

NOTE: *The width of the cutting groove is usually about twice the diameter of the hole in the hood.*

Respect of the above recommendations ensures greatly reduced thermal alterations of the material due to cutting, that are in any case always fewer than those caused by oxygen torches. The thermally altered zone is in any case smaller than the zone on which the weld is effective, so that in welding pieces that have been cut by plasma it is not necessary to perform any cleaning or grinding operations.

Installation

The place where the equipment is installed should be selected with care so as to ensure satisfactory, safe use.

The user is responsible for installation and use of the equipment according to the instructions provided by the manufacturer in this manual.

Temperatures must be between -20°C e +55°C. during transportation and/or storage in stores.

Before installing the equipment the user should take into consideration any possible electromagnetic problems in the work area.

In particular, we recommend that the equipment not be installed in the vicinity of:
- Signalling, control and telephone cables.
- Radiotelevision transmitters and receivers.
- Computers or controlling and measuring instrument.
- Safety and protection devices.

If the operator wears a pacemaker, hearing aid or other similar device, he should consult his doctor before approaching the equipment while it is running. The environment where the equipment is installed must conform with the degree of protection of the chassis that is IP 23 S (IEC publication 60529). The system is capable of working in environments where working conditions are particularly hard.

This equipment cools water by forced circulation of air and must therefore be positioned in such a way that the air can easily be drawn in and expelled through the openings in the chassis. The air must be free of oil, moisture, and other pollutants. Oil and excessive humidity may cause quick wear on consumables for the torch, or may even make it impossible to carry out cutting operations. Other pollutants can cause poor cutting performance and quick wear on consumables.

Connection to the electrical supply (Fig. A)

Connection of the machine to the user line (electrical current) must be performed by qualified personnel.
Before connecting the cutting equipment to the mains supply, check that the data on the machine plate correspond to the supply voltage and frequency and its main switch is on the "O" position (Pos. 1, Fig. A).
Connection to the power supply must be effected using the plug provided with the cutting plant (Pos. 2, Fig. A).
Proceed as follows if you have to replace the plug:

- 2 conducting wires are needed for connecting the machine to the supply
- The third, which is YELLOW GREEN in colour is used for making the "EARTH" connection.

Table 2 shows the capacity values that are recommended for fuses in the line with delays.

Table 2

Model		**POWER CUT 45**	
Single-phase power supply 50/60 Hz	V	115 ±15%	230 ±15%
Power input @ I_2 Max	kVA	4,8	5,5
Delayed fuse (I_2 @ 100%)	A	25	16
Duty cycle @ X% (40°C)	A	30 (25%)	40 (35%)
Mains supply connection cable Length Section	 m mm^2	 3 2,5	
Earth cable Length Section	 m mm^2	 4 6	

NOTE: *If extensions of the power supply cable are used, they must be of adequate cross section and never inferior to that of the cable supplied.*

Usage norms

COMMAND AND CONTROL DEVICES (Fig. B)

Pos. 1 Control panel (Fig. C).
Pos. 2 Snap-in connector for ground line.
Pos. 3 Centralised torch attachment.
Pos. 4 Power supply switch.
Pos. 5 Cutting plant power supply cable, complete with plug.
Pos. 6 Fast coupling to connect compressed air tube.
Pos. 7 Filter and cutting air pressure regulator. Adjust to pressure of 5 bar. The air filter automatically expels impurities.
Pos. 8 Pressure gauge for reading cutting air pressure.

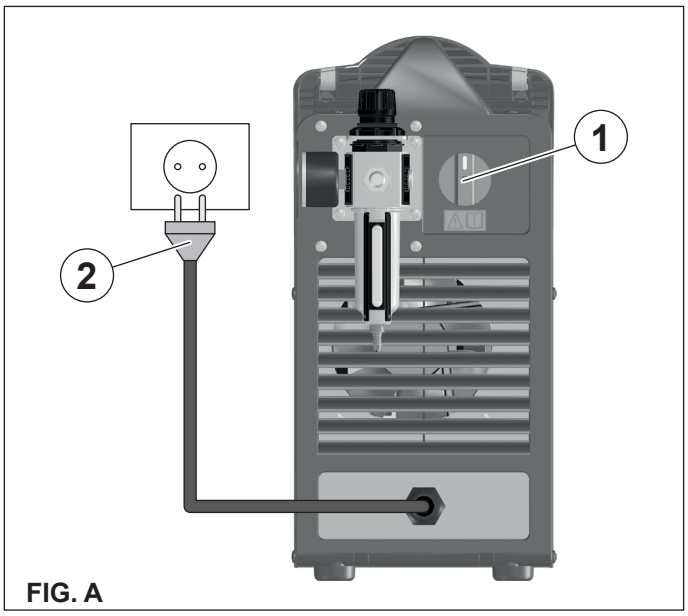

FIG. A

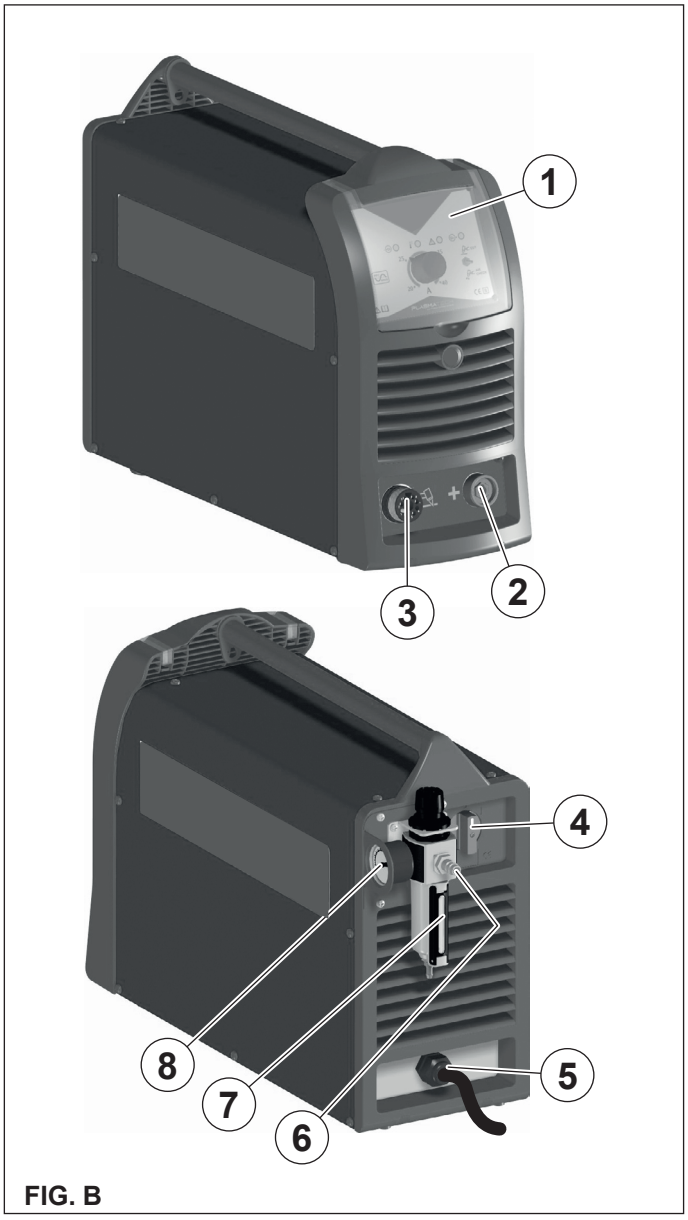

FIG. B

CONTROL PANEL (Fig. C)

Pos. 1 Cutting current adjustment knob.

Pos. 2 White LED - power supply on. When on the system is powered and ready for use.

Pos. 3 Yellow LED with dual function and protection: THERMOSTAT and OVERCURRENT.

- **THERMOSTAT function:** this LED shines to indicate that the overheating protection has cut in because the work cycle is not being followed. After several minutes the overheat cut-off rearms automatically (and the yellow LED turns itself off) and the welder is ready for use again.
- **OVERCURRENT function:** this LED shines to indicate that the overcurrent protection has cut in because the current has reached hazardous levels. The machine stops automatically. Switch off the machine by turning the power supply switch (Pos. 4, Fig. B) to position “O” and switch it on again after at least 5 seconds.

Pos. 4 GENERAL WARNING SIGNAL yellow LED. This switches on under the following conditions:

Switched on and flashing

- External nozzle on the plasma torch missing or screwed on incorrectly.
- Consumables (external nozzle, hood, electrode, etc.) on the plasma torch fitted incorrectly or worn.
- In case of a faulty short-circuit on the plasma torch between the electrode and the hood.

Switched on and steady

- No compressed air or insufficient pressure.

Pos. 5 Red PLASMA CUTTING CYCLE CHECK LED. This LED switches on when the torch button is held down. The plant is therefore ready for the cutting operation. It switches off when the torch button is released.

Pos. 6 Two position control:

- **CUT -** The switch must be moved to this position whenever you want to cut.
- **AIR CHECK -** The switch must be moved to this position whenever you want to carry out a test to check that air is present.

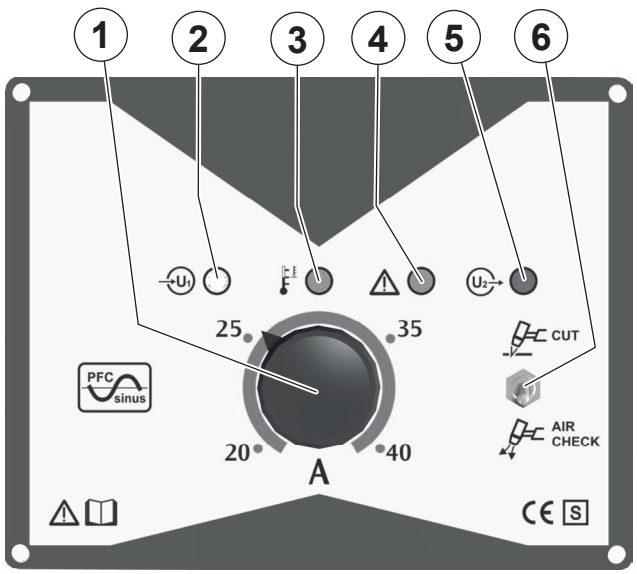

FIG. C

Connection of plasma torch and ground wire

IMPORTANT: *Before performing any operation regarding connection of the torch and ground wire, disconnect the power to the system.*

IMPORTANT: *Do not connect to the Plasma equipment any other torch different from the standard supplied unes; the utilisation of other non suitable torches might be dangerous for the operator.*

Connect the plasma torch to the centralised unit as shown in figure D, then screw the ring nut in place completely, until it is completely closed.

To obtain elevated cutting quality, the torch must transform the power generated by the plant into a high energy density plasma jet, so that it can efficiently melt metal and guarantee sufficient strength to remove the meted part from the cutting zone, impeding the formation of burrs. The torch is this a fundamental, indispensable component of the plasma cutting plant.

The standard supplied Plasma torch has special CEA electrical connections in the central adaptor. Before fitting a new equipment, make sure that the torch central adaptor electrical connectios are matching the ones of the Plasma equipment.

Connect the earth cable to the rapid coupling on the positive pole as indicated in figure D.

The ground wire has to be connected on the specific terminal to the piece to be cut, **which must be effectively grounded as well as the cutting bench**. Do not connect the ground terminal to the piece of material to be removed.

WARNING: *The work area must be free of oil, paint, and rust!*

FIG. D

Connection of compressed air

Connect the compressed air hose to the rapid coupling on the back of the plant (Pos. 6, Fig. B). The system must be fed with a constant flow of air at about 5 bar and with a minimum flow capacity of 150 liters per minute.
If you have to use industrial compressed air in gas cylinders:

- See the manufacturer's specifications for the procedures for installing and maintaining high pressure gas cylinders.
- Examine the valves on the cylinders to be sure that they are clean and free of oil, grease, or any other foreign material.
- The cylinders must be fitted with a pressure regulator that is able to provide feed pressures up to 6,9 bar and flows of at least 150 lit/min.

Sequence of operations to perform before cutting

IMPORTANT: *Before switching on the equipment follow these instructions carefully:*

- *Make sure the voltage and frequency of the supply network correspond to the data on the rating plate.*
- *Make sure all the torch components are correctly installed.*
- *Do not point the torch toward yourself or other persons nearby. If switched on accidentally the pilot arc spark would ignite and cause dangerous burns.*

- 1 -

Turn the power supply switch (Pos. 4, Fig. B) to position 1.

- 2 -

The plant has just been started, and only the white LED that shows that the mains power supply is on (Pos. 2, Fig. C) must stay on the rack panel. The plant's internal check runs a series of programmed tests, during which the fan motor switches on for a few seconds and air comes out of the torch.

- 3 -

Move the switch (Pos. 6, Fig. C) to the AIR CHECK position and run the test to check that air is present (air pressure: 5-5,5 bar).

WARNING: *The air comes out continuously!*

- 4 -

Move the switch (Pos. 6, Fig. C) to the CUT position to be able to begin cutting operations.

- 5 -

Adjust the electric current for cutting using the current regulation knob (Pos. 1, Fig. C). Increasing the current will permit higher speed cutting or, at the same speed, cutting of greater thickness.

- 6 -

Before starting to cut, effect a power on, moving the torch button protection upwards (Part A, Fig. E), and holding the torch button down (Part B, Fig. E), for several seconds until the cutting arc comes on. **Avoid contact with the metallic item!**

WARNING: *After starting the plant or after the end of the post airflow phase, the first time the pilot arc switches on this takes more time for the plant to carry out the necessary electronic and pneumatic tests.*

- 7 -

To start cutting, press the torch button again, lighting the pilot arc and starting air expulsion. During the cutting phase the white LED that indicates that the power supply is on (Pos. 2, Fig. C) and red LED that indicates that the plasma cutting cycle check is running (Pos. 5, Fig. C) remain on on the rack panel.

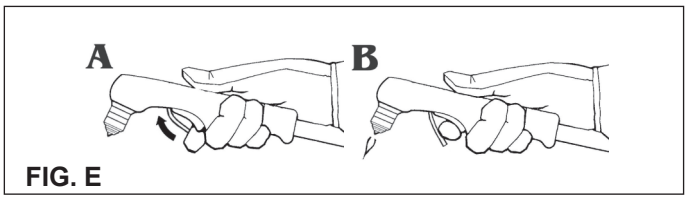

FIG. E

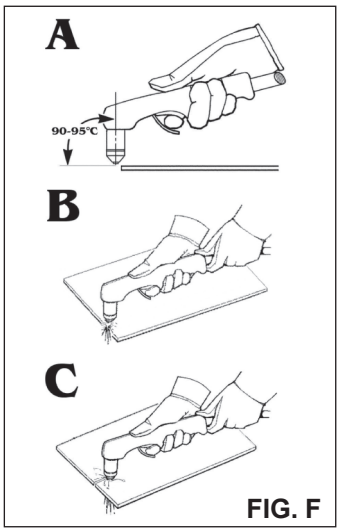

FIG. F

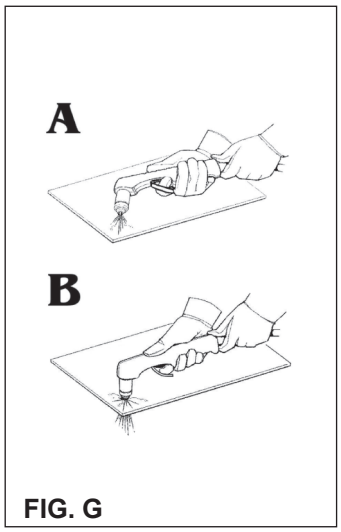

FIG. G

CUTTING FROM THE EDGE OF A PIECE (Fig. F)

A) Position the torch, in a vertical position, on the external edge of the item to be cut. In particular cases of extinction of the arc at the entrance of the item to be cut, increase the angle between the item and the metal by 95°.
B) Begin cutting from the external edge of the item until the arc has fully traversed the same.
C) During the cut the nozzle may be kept in direct contract with the item being cut. Do not hold the pilot arc on in the air to avoid wasteful wear on the electrode and nozzle.

CUTTING FROM WITHIN AN ITEM (Fig. G)

A) Cut with the torch in an angular position with respect to the item, the rotate slowly until perpendicular to the metal.
B) When sparks appear from the lower part of the item, this indicates that the cutting arc has completely perforated the item to be cut; The bore has been created and now the cut can proceed. If the sparks and/or residues spray upwards, this indicates that the torch is being moved too rapidly. Reduce cutting speed.

CUTTING WITH PROLONGED ITEMS

This technique is used to cut in poorly accessible positions such as angles, hollows, channels, etc.
Consumables are used at a higher rate with this technique.

IMPORTANT: *Precautions to be taken to cut correctly and efficaciously:*

- *Always cut moving the torch gently to achieve a stable, precise cut.*
- *Always cut moving the torch towards you which is simpler than cutting while pushing or moving away from yourself.*
- *Do not press or apply pressure to the torch during cutting operations.*
- *Always use a line of reference for straight cuts.*
- *To execute circular cuts, we recommend application of the specific compass (supplied upon request).*

- 8 -

Completion of cutting operations. Wait for the air flow to cease before powering off the plant. During this phase you may start a new cutting cycle: press the button to restart the pilot arc.

- 9 -

Turn the power supply switch (Pos. 4, Fig. B) to position "O", thereby switching off the plant.

Maintenance

ATTENTION: *Cut off the power supply to the equipment before effecting any internal inspection.*

SPARE PARTS
Original spares have been specifically designed for our equipment.
The use of spares that are not original may cause variations in the performance and reduce the safety level of the equipment. We are not liable for damage due to use of spare parts that are not original.

THE EQUIPMENT
As these systems are completely static except for the fan that is, in any case, provided with self-lubricating bushes, only the following operations are necessary:
- Periodic removal of accumulations of dirt and dust inside the equipment using compressed air.
- Periodical inspection for worn cables or loose connections that could cause overheating.
- Make sure the air circuit is completely free of any impurities and that the connections are tight and free of any leaks. In this regard, particular attention must be given to the solenoid valve and the air filter.
- Although the air filters do not have an automatic condensate drain, it is good practice to clean the air filter insert from time to time.

Possible problems and remedies

The power line is the cause of most problems. In case of breakdowns proceed as follows:
1) Check the line value of the voltage
2) Check that the power cable is perfectly fastened to the plug and mains switch
3) Make sure the fuses are not burnt or loose
4) Check the following for defects:
   - The switch that powers the machine
   - The wall socket for the plug
   - The equipment power switch

NOTE: *Given the technical knowledge required for equipment repair, we recommend, in case of faults, that you contact qualified personnel or our technical support service.*

TROUBLESHOOTING TABLE
It is normally possible to find the cause of a breakdown through the 4 warning LEDS located on the right hand side of the front of the system. The first thing to do, therefore, is to check which leds are on. Here below we are listing some of the possible breakdowns that may occur on the system.

Troubleshooting table

Defect	Cause	Remedy
White LED that indicates that the power supply is on (Pos. 2, Fig. C) is off	• Cutting plant power supply cable not connected to the mains power supply	• Connect the cutting plant power supply cable to the mains power supply
	• Power supply switch (Pos. 4, Fig. B) off	• Switch on the plant by turning the power supply switch (Pos. 4, Fig. B) to position 1
	• Mains voltage incorrect	• Check that the voltage for the power supply to the cutting plant corresponds to that for the actual mains power supply
	• Some components in the cutting plant are defective or malfunctioning	• Call in technical assistance
Yellow LED (Pos. 3, Fig. C) with dual function and protection: THERMOSTAT and OVERCURRENT switched on	• THERMOSTAT function: when this LED switches on it indicates that the trip switch has tripped because you are working beyond the work cycle	• After several minutes the overheat cut-off rearms automatically (and the yellow LED turns itself off) and the welder is ready for use again
	• OVERCURRENT function: this LED shines to indicate that the overcurrent protection has cut in because the current has reached hazardous levels; the machine stops automatically	• Switch off the machine by turning the power supply switch (Pos. 4, Fig. B) to position “O” and switch it on again after at least 5 seconds
GENERAL WARNING SIGNAL yellow LED (Pos. 4, Fig. C) on and flashing	• External nozzle on the plasma torch missing or screwed on incorrectly	• Fit the external nozzle on the plasma torch or check that it is screwed on correctly
	• Consumables (external nozzle, hood, electrode, etc.) on the plasma torch fitted incorrectly or worn	• Fit the consumables on the plasma torch correctly and replace them if necessary
	• In case of a faulty short-circuit on the plasma torch between the electrode and the hood	• Check that the electrode and the torch hood are fitted correctly
GENERAL WARNING SIGNAL yellow LED (Pos. 4, Fig. C) on and steady	• No compressed air or insufficient pressure	• Check and replace the pressure switch if necessary. • Check the feed circuit for the compressed air
Lack of air with torch button pressed	• Defective control board	• Replace
	• Defective solenoid valve	• Replace
Pilot arc does not go on when torch button is pressed	• Defective control board	• Replace
	• Worn electrode and hood on torch	• Replace
	• Torch button defective	• Replace
	• Plasma torch connected incorrectly or defectively.	• Check the plasma torch’s connection and replace it if necessary.
Arc goes out on contact with piece to be cut	• Lack of connection of ground wire	• Connect ground wire

Common cutting defects

Defect	Cause	Remedy
Insufficient penetration	• Cutting speed too high	• Reduce speed
	• Current too low	• Increase current
	• Ground wire connected wrong	• Check ground wire connection
Main arc goes out	• Cutting speed too slow	• Increase speed
	• Excessive erosion of electrode	• Replace electrode
Excessive residues	• Cutting speed too slow	• Increase speed
	• Hood hole eroded	• Replace hood
Hood overheated or black	• Current too high	• Reduce current
	• Space between hood and piece too small	• Increase space
	• Air dirty	• Clean air filter
	• Excessive erosion of electrode	• Replace electrode
Pilot arc intermittent or sparking	• Air dirty, greasy, wet	• Clean air filter
	• Pilot arc current too low	• Check the equipment pilot arc circuit

Meaning of graphic symbols on machine

•**1** Cutting current scale •**2** Positive pole rapid coupling for earth wiring connection •**3** System for use in environments with increased risk of electrocution •**4** White LED: signals power ON •**5** Red LED: signals activation of torch button •**6** Yellow LED for overheat cutoff •**7** Yellow LED (generic power warning signal) •**8** Grounding protection •**9** Dangerous voltage •**10** Before using the equipment you should carefully read the instructions included in this manual •**11** Warning! Risk of electric shock •**12** Product suitable for free circulation in the European Community •**13** Cut / air test switch •**14** Centralised torch attachment

•1 BP	•2 BS	•3 CC1-2	•4 CT	•5 D	•6 EL	•7 EVG	•8 IAP	•9 IL	•10 L	•11 LA
•12 LP	•13 LT	•14 LU	•15 MV	•16 PM	•17 POT1	•18 PR	•19 PT	•20 R	•21 RP1-2	•22 SC
•23 SF	•24 SP	•25 ST	•26 SW1	•27 TA	•28 TIP	•29 TP	•30 TPL	•31 TRP	•32 TRS	

Key to the electrical diagram

•**1** Primary transformer coil •**2** Secondary transformer coil •**3** Wiring interface connectors •**4** Torch connector •**5** Secundary diodes •**6** Torch electrode •**7** Air solenoid valve •**8** IGBT pilot arc current control •**9** Power supply switch •**10** Inductor •**11** LED mains power supply on •**12** LED various protective devices •**13** Thermostat intervention LED •**14** LED cutting power supply on •**15** Fan motor •**16** Earth clip •**17** Cutter voltage potentiometer •**18** Pressure switch •**19** Torch button •**20** Resistor •**21** Primary rectifier •**22** Control PCB •**23** Front panel PCB •**24** Inverter PCB •**25** Protection on torch •**26** Cut / air test switch •**27** Current transformer •**28** Plasma torch hood •**29** Main transformer •**30** Plasma torch •**31** Primary circuit thermostat •**32** Secondary circuit thermostat

Colour key

Ar Orange
Bc White
Bl Blue
Gg Grey
Gl Yellow
GV Yellow Green
Mr Brown
Nr Black
Rs Red
Vd Green
Vl Violet

Wiring diagram

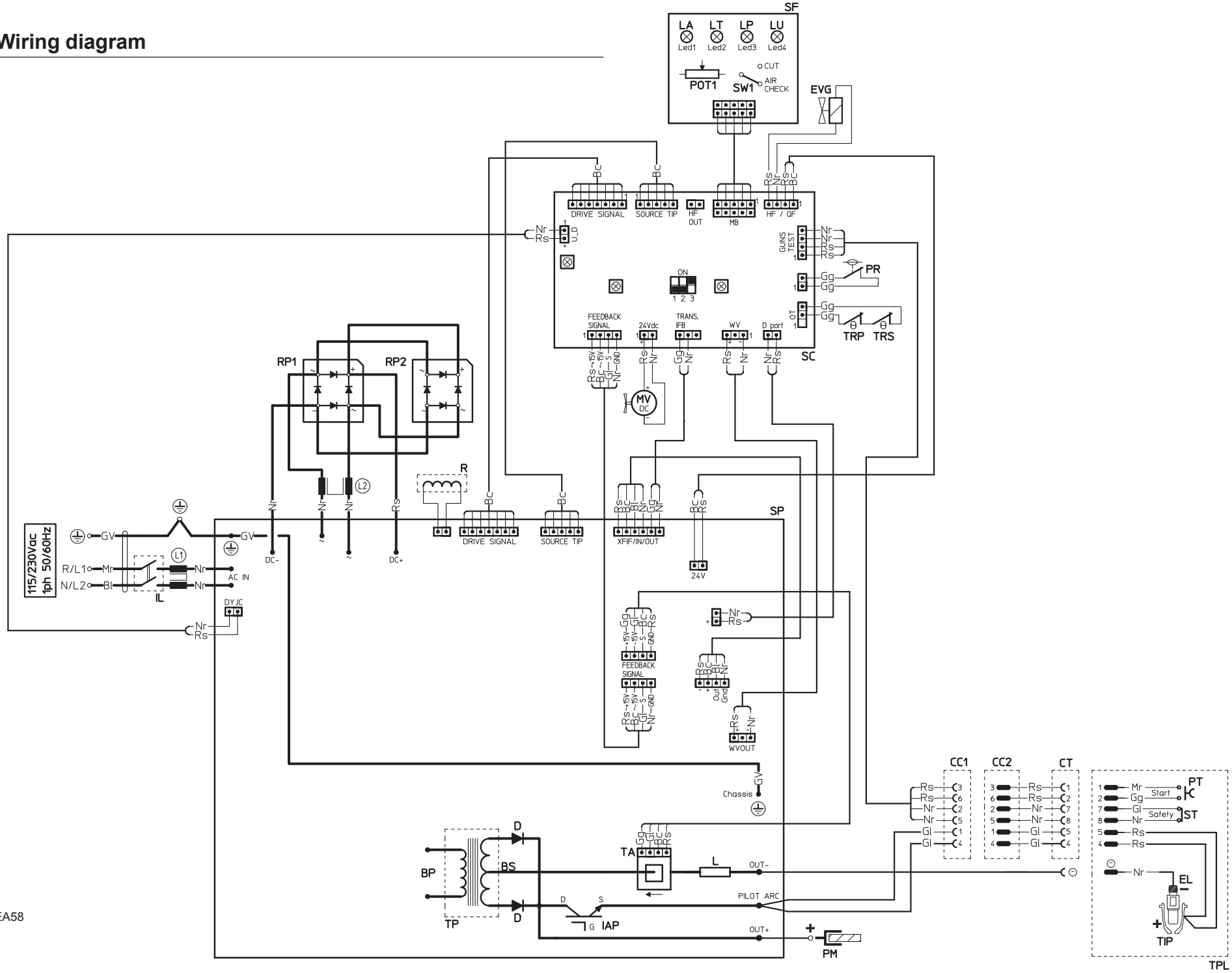

2101EA58

POWER CUT 45

IT	*Lista ricambi*	LEGGERE ATTENTAMENTE
EN	*Spare parts list*	READ CAREFULLY
FR	*Liste pièce de rechange*	LIRE ATTENTIVEMENT
DE	*Ersatzteilliste*	SORGFÄLTIG LESEN
ES	*Lista repuestos*	LEER ATENTAMENTE
NL	*Onderdelenlijst*	EERST GOED DOORLEZEN
PT	*Lista de peças de substituição*	LER ATENTEMENTE
DA	*Liste over reservedele*	LÆS OMHYGGELIGT
SV	*Reservdelslista*	LÄS NOGAS
FI	*Varaosaluettelo*	LUE HUOLELLISESTI
N	*Reservedelliste*	LES NØYE
RU	*Список запасных частей*	ПЕРЕД НАЧАЛОМ РАБОТЫ ВНИМАТЕЛЬНО ПРОЧТИТЕ ИНСТРУКЦИЮ

IT Lista ricambi	ES Lista repuestos	SV Reservdelslista
EN Spare parts list	NL Onderdelenlijst	FI Varaosaluettelo
FR Liste pièces de rechange	PT Lista de peçãs de substituiçao	N Reservedelliste
DE Ersatzteilliste	DA Liste over reservedele	RU Список запчастей

Pos.	POWER CUT 45	POWER CUT 45	Descrizione	Description
1	439398	439398A	Adesivo regolazioni frontali	Rack adjustment sticker
2	438883	438883	Manopola corrente	Current knob
3	352453	352453	Visiera rack frontale	Front rack transparent visor
4	352378	352378	Pannello frontale	Front panel
5	403608	403608	Attacco dinse polo positivo	Quick connection positive polarity
6	239630	239630	Cavo massa 4m	Work cable and clamp
7	468296	468296	Adesivo lato connessione torcia Plasma	Sticker central connection Plasma torch side
8	236621	236621	Attacco centralizzato torcia Plasma	Central connection Plasma torch
9	461947	461947	Contatto femmina attacco centralizzato (conf. 10 pz)	Female terminal for central connector (pack 10 pcs)
10	022067	022067	Torcia Plasma SK65 4m	Plasma torck SK65 4m
11	431329	431329	Piedino in gomma	Rubber foot

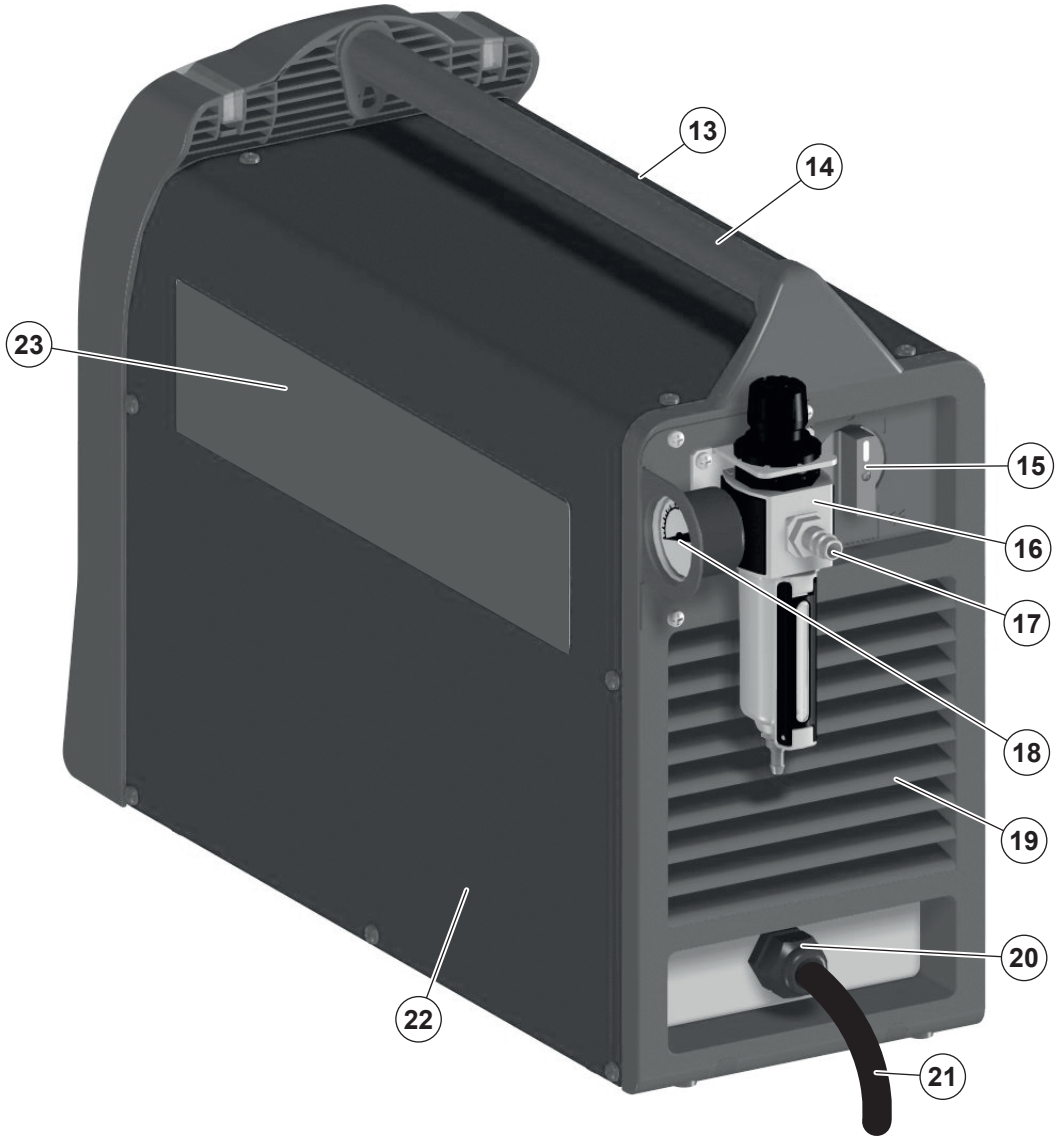

Pos.	POWER CUT 45	POWER CUT 45	Descrizione	Description
13	438103	438103	Maniglia	Handle
14	438710	438710	Manopola interruttore	Main switch knob
15	432029	432029	Filtro regolatore	Air filter
16	404370	404370	Attacco rapido ingresso aria compressa	Air inlet nipple
17	438400	438400	Manometro	Manometer
18	352377	352377	Pannello posteriore	Rear panel
19	427895	427895	Pressacavo linea	Main cable clamp
20	235942	235960	Cavo linea	Main cable
21	420483	420483	Coperchio completo logo PLASMATECH	Steel cover complete with logo PLASMATECH stickers
22	468750	468750	Adesivo logo PLASMATECH	Sticker logo PLASMATECH

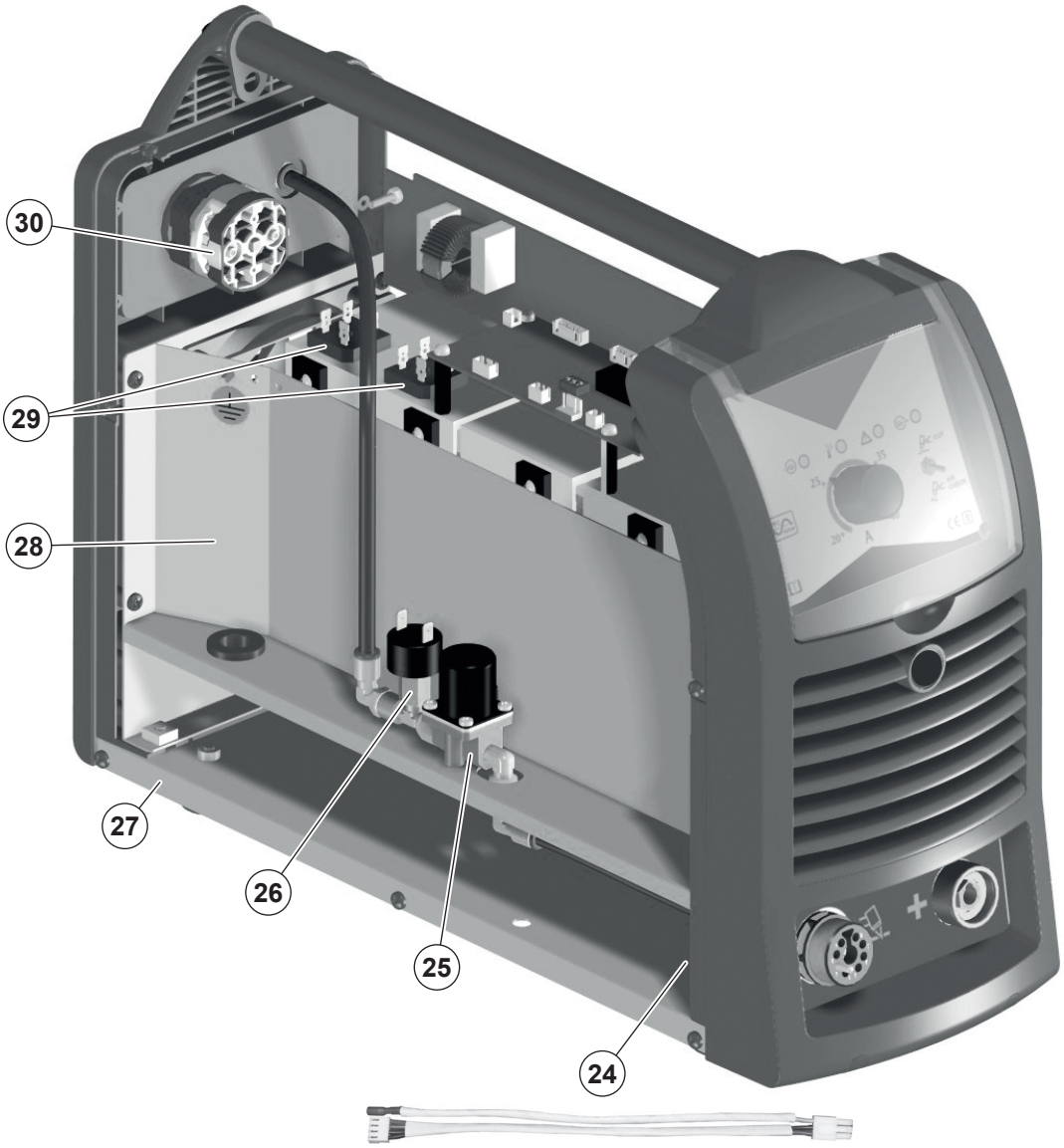

Pos.	POWER CUT 45	POWER CUT 45	Descrizione	Description
24	413452	413452	Cablaggio attacco centralizzato torcia Plasma	Central connection Plasma torch wiring
25	425944	425944	Elettrovalvola	Air solenoid valve
26	453249	453249	Pressostato	Pressostat switch
27	404898	404898	Basamento metallico	Steel base
28	449586	449586	Telaio interno metallico	Steel internal chassis
29	455500	455500	Raddrizzatore primario	Primary rectifier
30	435375	435375	Interruttore bipolare	1ph main switch

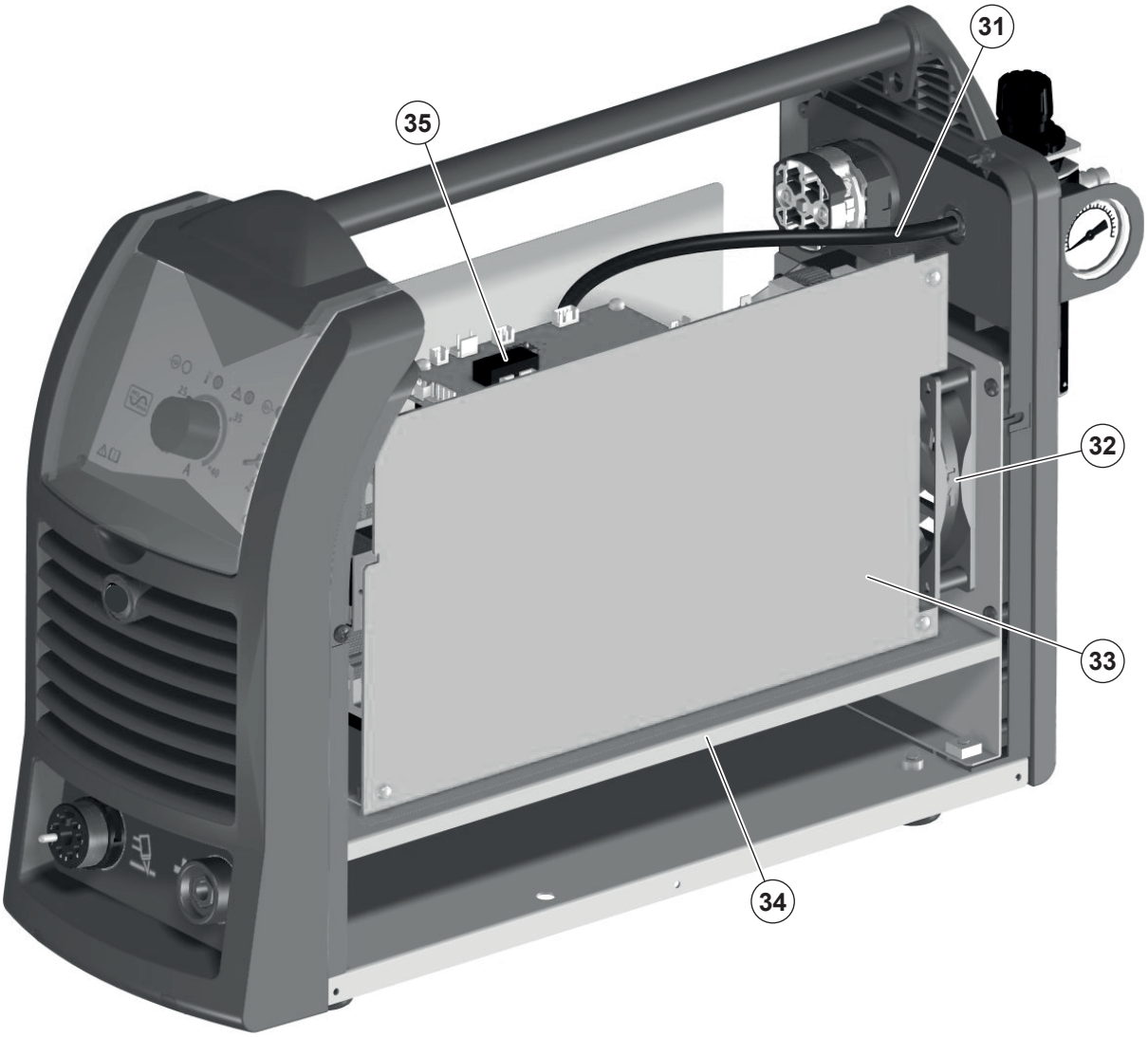

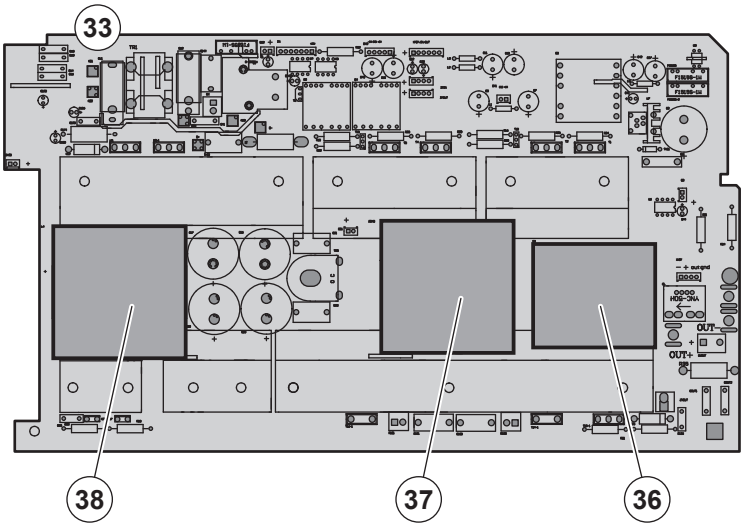

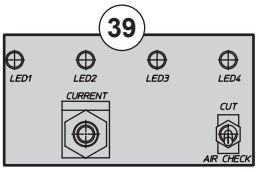

Pos.	POWER CUT 45	POWER CUT 45	Descrizione	Description
31	485497	485497	Tubo rilsan Ø8	Ø8 rilsan hose
32	486373	486373	Ventilatore	Fan
33	241267	241267	Assieme inverter di potenza	Power inverter assembly
34	353055	353055	Isolamento scheda inverter di potenza dal telaio	Power inverter electric insulation from the chassis
35	377121	377121	Scheda elettronica controllo inverter	Inverter control pcb
36	240241	240241	Induttanza principale	Main inductance
37	481406	481406	Trasformatore principale	Main transformer
38	240242	240242	Induttanza PFC	PFC inductance
39	377122	377122	Scheda elettronica rack frontale	Rack pcb

IT Ordinazione dei pezzi di ricambio

Per la richiesta di pezzi di ricambio indicare chiaramente:
1) Il numero di codice del particolare
2) Il tipo di impianto
3) La tensione e la frequenza che rileverete dalla targhetta dei dati posta sull'impianto
4) Il numero di matricola

ESEMPIO
N° 2 pezzi, codice n. 352419 - per l'impianto POWER CUT 45 115/230 V - 50/60 Hz - Matricola n° .....

EN Ordering spare parts

To ask for spare parts clearly state:
1) The code number of the piece
2) The type of device
3) The voltage and frequency read on the rating plate
4) The serial number of the same

EXAMPLE
N. 2 pieces code n. 352419 - for POWER CUT 45 - 115/230 V - 50/60 Hz - Serial number .....

FR Commade des pièces de rechange

Pour commander des pièces de rechange indiquer clairement:
1) Le numéro de code de la pièce
2) Le type d'installation
3) La tension et la fréquence que vous trouverez sur la petite plaque de données placée sur l'installation
4) Le numéro de matricule de la même

EXEMPLE
N. 2 pièces code 352419 - pour l'installation POWER CUT 45 - 115/230 V - 50/60 Hz - Matr. Numéro .....

DE Bestellung Ersatzeile

Für die Anforderung von Ersatzteilen geben Sie bitte deutlich an:
1) Die Artikelnummer des Teiles
2) Den Anlagentyp
3) Die Spannung und Frequenz, die Sie auf dem Datenschild der Anlage finden
4) Die Seriennummer der Schweißmaschine

BEISPIEL
2 Stück Artikelnummer 352419 - für Anlage POWER CUT 45 - 115/230 V - 50/60 Hz - Seriennummer .....

ES Pedido de las piezas de repuesto

Para pedir piezas de repuesto indiquen claramente:
1) El número de código del particular
2) El tipo de instalación
3) La tensión y la frequencia que se obtien de la chapa datos colocada sobre la instalación
4) El número de matrícula de la soldadora misma

EJEMPLO
N. 2 piezas código 352419 - para instalación POWER CUT 45 - 115/230 V - 50/60 Hz - Matrícula N. .....

NL Bestelling van reserveonderdelen

Voor het bestellen van onderdelen duidelijk aangeven:
1) Het codenummer van het onderdeel
2) Soort apparaat
3) Spanning en frequentie op het gegevensplaatje te vinden
4) Het serienummer van het lasapparaat

VOORBEELD
N. 2 stuks code 352419 - voor apparaat POWER CUT 45 - 115/230V - 50/60 Hz - Serie Nummer .....

PT Requisição de peças sobressalentes

Ao pedir as peças de substituição indique claramente:
1) O número de código da peça
2) O tipo de equipamento
3) A tensão e a frequência indicadas na la placa de dados do equipamento
4) O número de matrícula da própria máquina de soldar

EXEMPLO
N° 2 peças código n. 352419 - para o equipamento POWER CUT 45 - 115/230 V - 50/60 Hz
Matrícula n. .....

DA Bestilling af reservedele

For at bestille reservedele skal man nøjagtigt angive:
1) Reservedelens kodenummer
2) Anlæggets type
3) Spænding og frekvens, som står på anlæggets typeskylt
4) Selve svejsemaskinens registreringsnummer

EKSEMPEL
2 stk. nummer 352419 - til anlæg model POWER CUT 45 - 115/230V - 50/60 Hz
Registreringsnummer Nr. .....

SV Beställning af reservdelar

Vid förfrågan av reservdelar ange tydligt:
1) Detaljens kodnummer
2) Typ av apparat
3) Spänning och frekvens - den står bland tekniska data påapparatens märkplåt
4) Svetsens serienummer

EXEMPEL
2 st. detaljer kod 352419 - för apparat POWER CUT 45 - 115/230V - 50/60 Hz - Serienummer .....

FI Varaosien tilaus

Tiedustellessanne varaosia, ilmoittakaa selvästi:
1) Osan koodinumero
2) Laitteiston tyyppi
3) jännite ja taaiuus, jokta on ilmoitettu laitteistolle sijoitetusta tietokyltistä
4) Hitsauskoneen sarjanumero

ESIMERKKI
2 osaa, koodi 352419 - laitteistoon POWER CUT 45 - 115/230V 50/60 Hz - Sarjanumero .....

N Bestilling av reservedeler

Ved bestilling av reservedeler må du oppgi:
1) Delenes kodenummer
2) Type apparat
3) Apparatets spenning og frekvens som finnes på merkeplaten for data på apparatet
4) Sveiseapparatets serienummer

EKSEMPEL
2 stk. kode 352419 - for apparat POWER CUT 45 - 115/230 V - 50/60 Hz - Serienummer.....

RU Заказ запасных частей

Для запроса запасных частей укажите точно:
1) код запчасти,
2) модель машины,
3) напряжение и частоту, написанные на пластине,
4) ее серийный номер.

ПРИМЕР
2 шт., код № 438401
n - штук деталей, код 352419, для сварочной машины POWER CUT 45 230 В - 50/60 Hz
Серийный номер .....

POWER CUT 45

GeKaMac®

Gedik Welding Inc.
Ankara Caddesi No: 306 Şeyhli 34906 Pendik - İstanbul / Turkey
P. +90 216 378 50 00 • **F.** +90 216 378 20 44
www.gedikwelding.com